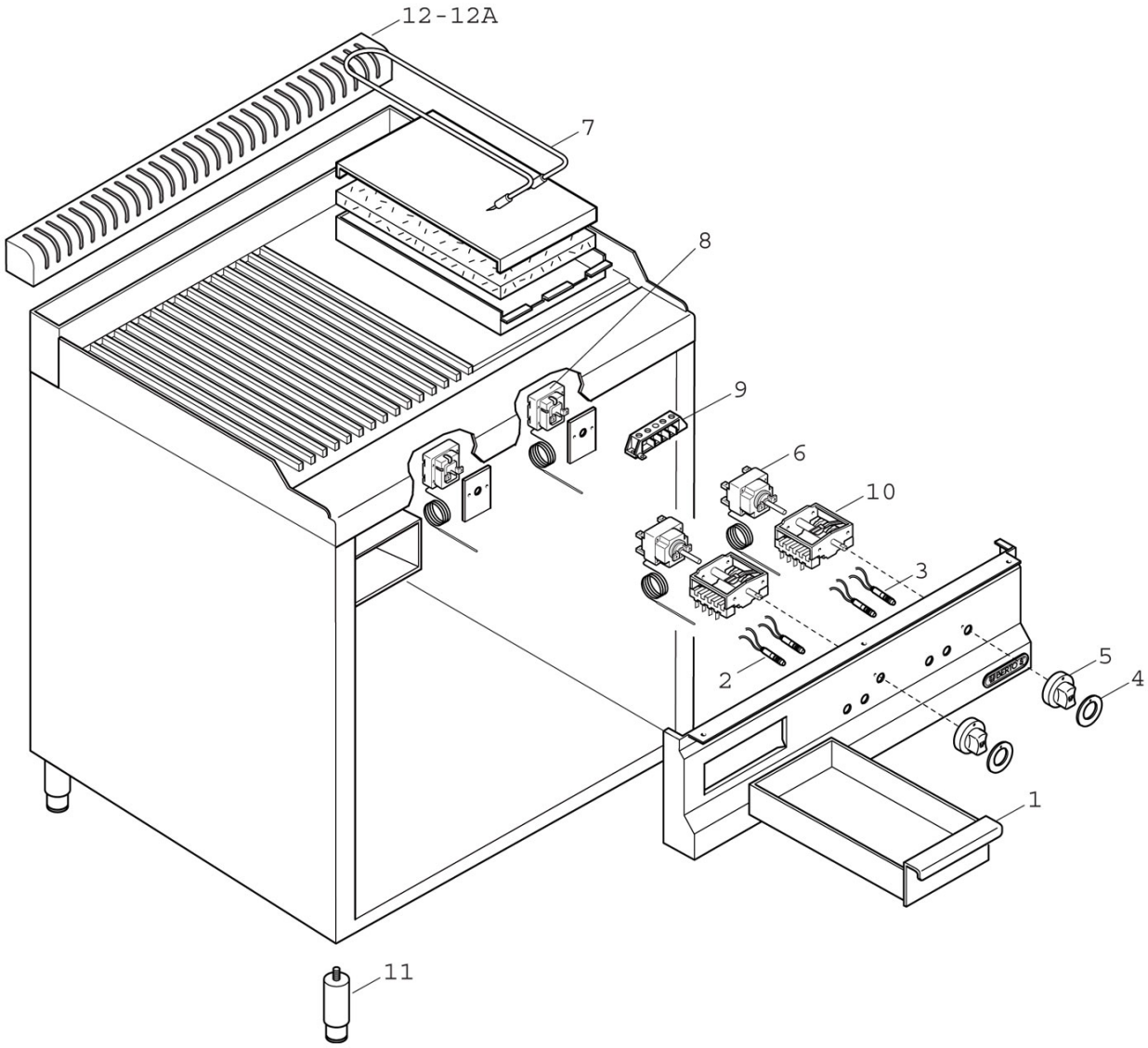
12-12A
7
8
9
6
10
3
2
5
4
1
11

SE9FL4MP

Pos. Item	Codice Code	Descrizione	Item Description	Designation articles	Artikelbeschreibung	Decripciòn artìculos	N° pezzi - No. pieces					
1	38791500	Cassetto fry-top serie s900	Drip tray s900 serie	Bac recueille sauces s900	Sossen-auffangschale s900	CajÓn colector de jugos s900						1
2	30168500	Spia arancio 230v d.10mmt150Ø	Orange lamp 230v	Temoin lumineux orange 230v	Orange kontrollampe 230v	Piloto naranja 230v						1
3	30168800	Spia verde 230v d.10mmt150Ø	Green lamp 230v	Temoin lumineux vert 230v	Grune kontrollampe 230v	Piloto verde 230v						1
4	31953500	Serig.rossa manop.frytop/forno	Knob serigraphy	Serigraphie manette	Drehknopfserigraphie	Serigrafia mando						1
5	31857800	Guarnizione gomma sottomanopol	Sub-knob seal	Joint sous-manette	Dichtung unterknopf	Empaquetadura sub-mando						1
5	35954900	Sottomanopola rossa attr. el.	Sottomanopola rossa attr. el.	Sottomanopola rossa attr. el.	Sottomanopola rossa attr. el.	Sottomanopola rossa attr. el.						1
5	35877600	Man. rossa p.6x4,6 a 180°ral30	Red knob p. p.6x4,6 a 180°ral3	Manette rouge p.6x4,6 a 180°ra	Drehknopf p.6x4,6 a 180°ral300	Mando rojo p.6x4,6 a 180°ral30						1
6	30064900	Termostato trif.270Ø x fe 2/1	Thermostat 270Ø - fe 2/1	Thermostat 270Ø - fe 2/1	Thermostat 270Ø - fe 2/1	Termostato 270Ø - fe 2/1						1
7	35039400	Res.2250w-240v frytop potenzia	2250w-240v heating element	RÉsistance 2250w-240v	Widerstand 2250w-240v	Resistencia 2250w-240v						3
8	22069700	Termostato trif.sicur.fry-top	Security thermostat	Thermostat de surete	Sicherheitthermostat	Termostato de seguridad						1
9	25185100	Kit morsettiera 10 mmq	Terminal board 10 mmq	Bornier 10 mmq	Klemmenleiste 10 mmq	Bornera 10 mmq						1
10	22050300	Interr. quadrip. fry-top/700;	Switch	Interrupteur	Schalter	Interruptor						1
11	24685000	Piedino inox 2'h125/175	Inox foot 2'h125/175	Pied inox 2'h125/175	Fuss inox 2'h125/175	Pata inox 2'h125/175						4
12	38856900	Griglietta scarico fumi l=350	Cover grill for chimney l=350	Grille pour cheminee l=350	Entleerung rauch rost l=350	Rejilla por chimenea l=350						1